OPERATIONAL PLAN

Atikokan Drinking Water System

Revision 7

NORTHERN WATERWORKS INC.

Table of Contents

0 DWQMS Matrix

The DWQMS Matrix provided below indicates how the PLAN requirements of Ontario's DWQMS are addressed by Northern Waterworks Inc. DWQMS Elements are addressed through a combination of documentation which includes Operational Plans, corporate procedures, and system-specific procedures. This matrix is intended to facilitate the understanding of the reader with respect to the structure of NWI's QMS. Additionally, this matrix will act to facilitate internal and external auditing processes.

DWQMS Element	Document Title
1 – Quality Management System	Operational Plan [ADWS-OP]
2 – QMS Policy	Operational Plan [ADWS-OP]
3 – Commitment and Endorsement	Operational Plan [ADWS-OP]
4 – QMS Representative	QMS Representative Policy [NWI-QMS-4]
5 – Document & Records Control	Document & Records Control Procedure [NWI-QMS-5]
6 – Drinking-Water System	Operational Plan [ADWS-OP]
7 – Risk Assessment	Risk Assessment Procedure [NWI-QMS-7]
8 – Risk Assessment Outcomes	Risk Assessment Outcomes [ADWS-QMS-8]
9 – Organizational Structure, Roles, Responsibilities and Authorities	Organizational Policy [NWI-QMS-9]
10 – Competencies	Competencies Policy [NWI-QMS-10]
11 – Personnel Coverage	Personnel Coverage Policy [NWI-QMS-11]
12 – Communications	QMS Communication Procedure [NWI-QMS-12]
13 – Essential Supplies and Services	Essential Supplies and Services Procedure [NWI-QMS-13]
14 – Review and Provision of Infrastructure	Review and Provision of Infrastructure Procedure [NWI-QMS-14]
15 – Infrastructure Maintenance, Rehabilitation and Renewal	Operational Plan [ADWS-OP]
16 – Sampling, Testing and Monitoring	Sampling, Testing and Monitoring Procedure [ADWS-QMS-16]
17 – Measurement and Recording Equipment Calibration and Maintenance	Measurement and Recording Equipment Calibration and Maintenance Procedure [ADWS-QMS-17]
18 – Emergency Management	Emergency Management Procedure [NWI-QMS-18]
19 – Internal Audits	Internal Audit Procedure [NWI-QMS-19]
20 – Management Review	Management Review Procedure [NWI-QMS-20]
21 – Continual Improvement	Continual Improvement Procedure [NWI-QMS-21]

1 Quality Management System

The Drinking Water Quality Management System (QMS) for the Atikokan Drinking Water System is documented in this Operational Plan as part of NWI's efforts to ensure that clean, safe, and reliable drinking water is supplied to all customers served by this system. The development and continual improvement of the Operational Plan will help to ensure that all regulatory requirements are met and that consumers can be confident that their drinking water will be protected through the effective application of the QMS. This Operational Plan was developed to meet the Ministry's Drinking Water Quality Management Standard.

2 Quality Management System Policy

The Corporation of the Town of Atikokan utilizes the services of Northern Waterworks Inc. (NWI), an independent contracted operating authority, to operate, maintain, manage and administer the Atikokan Drinking Water System (as per agreement). The Town of Atikokan and Northern Waterworks Inc. are committed to the following:

1) Providing the consumer with clean, safe drinking water;

2) Meeting or exceeding all applicable legislative and regulatory requirements; and,

3) Maintaining and continually improving our quality management system.

3 Commitment and Endorsement

The Town of Atikokan and NWI support the implementation, maintenance, and continual improvement of a drinking water Quality Management System for the Atikokan DWS, as documented in this Operational Plan. The Town and NWI acknowledge the need for and support the provision of sufficient resources to maintain and continually improve the QMS. All the undersigned persons hereby endorse this Operational Plan:

Name & Title:	Signature:	Date:
Dennis Brown Mayor Town of Atikokan	Dennis Brown	May 8, 2019
Jason Young Chief Administrative Officer Town of Atikokan	Jason Young	May 7, 2019
Jason LeBlanc Chief Administrative Officer Northern Waterworks Inc.	Jason LeBlanc	April 9, 2019
Gilles Vachon Northwest Regional Manager Northern Waterworks Inc.	Gilles Vachon	April 9, 2019

4 QMS Representative

Refer to the *QMS Representative Policy* [NWI-QMS-4].

5 Document & Records Control

Refer to the *Document and Records Control Procedure* [NWI-QMS-5].

6 Drinking-Water System

6.1 System Overview

The Atikokan Drinking Water System provides a potable water supply to the community of Atikokan and is composed of the Low Lift (Raw Water) Pumping Station (LLPS), the Atikokan Water Treatment Plant (a Class III facility with a design rated capacity of 6,048 m^3/day), and the Atikokan Distribution System (a Class I water distribution system). The Atikokan Drinking Water System is owned by the Corporation of the Town of Atikokan and Northern Waterworks Inc. serves as the accredited operating authority.

The source water for the treatment process is drawn from a surface water source, the Atikokan River. Plateau Lake, which is located upstream from the source water intake, is also available as a potential source of raw water under certain circumstances (i.e. low river levels). In such circumstances, the opening of a dam located at Plateau Lake would supply the Atikokan River with water.

Potential pathogenic organisms are removed from the raw water by chemical coagulation, sand-ballasted flocculation, clarification, filtration, and free chlorine disinfection. This multiple barrier approach helps to ensure consistently safe and clean drinking water.

6.2 Source Water Characteristics and Event-Driven Fluctuations

General characteristics for the source water (Atikokan River) are provided below:

Parameter	Results Range* (2011 - 2018)	Average (2011 - 2018)
Turbidity (NTU)	0.62 - 1.67	1.12
Temperature (^oC)	1 - 24	11
pH	6.9 - 7.8	7.2
Alkalinity (mg/L as $CaCO_3$)	17 - 28	24
E. Coli (MPN/100mL)	<1 - 138	---
Total Coliforms (MPN/100mL)	17 - >2420	---
*The minimum and maximum values for the results range are expressed as minimum and maximum monthly averages. Results in the table were compiled from water quality data collected between January 1, 2011 and December 31, 2018.		

Event-driven fluctuations in the source water and subsequent operational challenges are summarized as follows:

(1) Low water levels in the Atikokan River may impact source water supply. Plateau Lake is available to supply water to the Atikokan River during such events.

(2) A deterioration in source water quality (i.e. increase turbidity and colour) may be associated with annual spring run-off and significant rainfall events. Such situations may require timely adjustments to treatment processes and dosages. Water production may also cease in response to a deterioration in source water quality, and only be resumed when water quality returns to normal values. Where the deterioration in source water quality is an extended event, filter run times may become reduced and backwash frequencies increased. These extended situations may reduce the production capacity of the Atikokan WTP and may require more resources to manage.

    Monitoring processes, control measures and response procedures are available to minimize the operational challenges posed by sudden changes to raw water characteristics. Procedures have also been developed to manage extended source water quality deterioration events.

(3) Seasonal changes in water temperature may impact treatment performance as it concerns chemically-assisted filtration and disinfection processes. Higher water temperatures are also associated with increased biological activity in the source water, resulting in high turbidity, colour, micro-organism counts, and the potential for taste and odour problems.

    Generally, seasonal changes pose only minor challenges, and these challenges can be anticipated and may require adjustments to treatment processes or chemical dosages.

(4) A number of potential pollution sources are known to affect the Atikokan River. The Atikokan River is adjacent to a rail line, highway and hydro corridors, and there is the potential for spills (caused by accidents or other means such as herbicide application) and runoff. Potential sources of upstream contamination also include a sawmill at Sapawe Lake and increasing residential development on Plateau Lake and Fire Lake. The area is also influenced by some recreational activities and is susceptible to both natural bacteriological contamination by wildlife.

    Monitoring processes (i.e. routine or additional regulatory sampling and water quality testing, continuous monitoring), control measures (including normal treatment barriers), and emergency response procedures are available to minimize the operational challenges posed by a source water contamination event.

(5) Algal blooms in the source water and at upstream locations could pose a potential concern, whereby such events could interfere with treatment processes and associated toxins may pose a risk of treated water contamination. Monitoring processes, control measures and response procedures are available to minimize the operational challenges posed by algal blooms.

6.3 Treatment Processes

6.3.1 Source Water Intake & Pumping

Source water is drawn from the intake crib located on the bank of the Atikokan River. The intake crib consists of two (2) cells which are situated approximately 3 m below the surface of the river. Each cell contains a 5.6 m by 1.06 m stainless steel screen with 6 mm by 6 mm openings, complete with a lifting chain and intake and outlet sluice gates. From the intake crib, source water enters a ductile iron intake pipe. This intake pipe is 70 m in length and 450 mm in diameter, and extends from the crib to the Low Lift Pumping Station (LLPS).

Three (3) centrifugal low lift pumps located at the LLPS are available to transfer source water directly to the Actiflo treatment units located at the Water Treatment Plant. Low lift pump no. 1 is rated at 35.0 L/s at a total dynamic head (TDH) of 13 m, while low lift pumps no. 2 and 3 are each rated at 35.0 L/s at a TDH of 25 m. Water is transferred to the WTP through an 870 m long by 300 mm diameter raw water supply line.

The LLPS also includes two (2) basket strainers, two (2) basket strainer backwash pumps, and backwash discharge lines to discharge screenings through an overflow pipe and back to the Atikokan River.

6.3.2 Coagulation, Flocculation and Clarification

A primary coagulant chemical is added to the incoming raw water upstream from the coagulation basins of the Actiflo treatment units. The coagulant chemical feed system at the Atikokan WTP consists of two (2) chemical metering pumps in duty/standby configuration and with automatic switchover capability, one (1) 22 m^3 bulk chemical storage tank, and one (1) 655 L chemical storage tank. Coagulant dosing at the facility is paced to the raw water flow rate.

The coagulated water solution enters one or both of two available Actiflo treatment units, which each include a coagulation basin, injection basin, maturation basin, settling zone, mixers, sludge scraper assembly, and a microsand recirculation system. Each Actiflo clarifier is rated at 35 - 70 L/s.

Coagulated water first enters the coagulation basin, which promotes rapid mixing of the chemicals with the raw water. Water is then directed to the injection basin, where microsand is injected and gentle mixing is provided in order to promote the formation of floc masses. Additionally, a flocculant aid (polymer) chemical is added at this stage in the treatment process to aid in floc formation. The polymer chemical feed system at the Atikokan WTP consists of four (4) metering pumps (one duty and one standby per Actiflo treatment unit complete with automatic switchover) and an automatic polymer solution mixing system with automatic transfer to the chemical storage tank. Polymer dosing at the facility is paced to the raw water flow rate.

Following the addition of microsand and polymer, process water then flows into the maturation basin to allow for floc maturation and eventually into the settling zone of the clarifier. In the settling zone, flow velocity is reduced and floc is allowed to settle. Supernatant is then directed to the filter units.

Settled sludge is directed to the microsand recirculation system consisting of two (2) recirculation pumps per Actiflo treatment unit. Generally, only one pump is used to recirculate microsand at a given time. Microsand is separated from the sludge in the hydrocyclone device located on the recirculation pump discharge line. The microsand is recycled and returned to the treatment process, while the sludge is directed to the process wastewater tanks. Microsand must also be manually added to the treatment process at regular intervals to replenish the small amounts of microsand lost gradually over time. Operators monitor the microsand concentration in the treatment process to determine when more sand must be added.

6.3.3 Filtration

Most of the particulate matter that was present in the raw water will become an insoluble floc and will be removed by settling in the clarifiers. During normal operation, however, some floc passes from the Actiflo clarifiers to the filter units. Any remaining particles that have not settled out are removed by passing water through the dual media filters composed of anthracite and silica sand on a layer of support gravel.

There are four (4) filter units at the Atikokan WTP, each measuring 3.05 m in diameter with a firm filtration velocity of 11.5 m/hour. Each filter includes a rotary surface wash system, filter-to-waste piping and associated valving on the filter effluent lines, appurtenances and controls. Generally, all four (4) filter units operate in parallel during water production.

Filters are periodically cleaned by reversing the flow of water (backwashing) through the filter. Two (2) vertical turbine backwash pumps each rated at 76 L/s at a TDH of 18.3 m are available for this process.

6.3.4 Disinfection

Chlorine gas is used to achieve both primary and secondary disinfection at the Atikokan Water Treatment Plant. Primary disinfection ensures that any potentially pathogenic organisms that remain after previous treatment processes are destroyed or inactivated. To achieve primary disinfection, a super-chlorinated solution is applied to the filtrate upstream from the treated water storage reservoirs. Consistent disinfection is ensured by continuous monitoring of the disinfectant residual in filtrate and in treated water leaving the facility.

Secondary disinfection requirements are achieved by adding a sufficient amount of free chlorine at the WTP to maintain a residual throughout the distribution system. The purpose of this procedure is to prevent the growth of biofilm within the distribution system and to protect the water from re-contamination as it flows through the community.

The gas chlorine disinfection system at the Atikokan WTP is housed in a separate chlorine room and consists of two (2) automatically controlled chlorinators, one (1) manually operated chlorinator, and an automatic chlorinator switchover system consisting of an automatic switchover panel complete with a duty/standby configuration for two chlorine controllers dedicated to primary disinfection. All chlorinators are outfitted with process control modules, complete with all associated piping, appurtenances, and controls to enable the chlorinators to discharge at the filtrate injection point. The chlorine room also includes cylinder weighing scales for two (2) 68 kg chlorine cylinders, an automatic cylinder switchover system, a gas flow meter, and instrumentation and controls including vacuum regulators, a gas detector and alarm system.

6.3.5 Fluoridation & pH Adjustment

After filtration and prior to entering the clearwell, water is fluoridated in an effort to prevent dental caries and tooth decay in the community. The hydrofluorosilicic acid chemical feed system at the Atikokan WTP consists of two (2) chemical metering pumps in duty/standby configuration and one (1) 450 L chemical storage tank. Fluoride dosing at the facility is paced to the combined filtrate flow rate.

The primary coagulant used at the Atikokan WTP reduces the pH of the water. A pH/alkalinity adjustment chemical is added to the filtered water in order to restore this variable to a level that will not cause excessive corrosion in the water distribution system. The soda ash chemical feed system at the Atikokan WTP consists of two (2) chemical metering pumps in a duty/standby configuration with automatic switchover, and one (1) 10 m^3 chemical storage tank complete with mixer. Soda ash solution is mixed at the facility and dosing is paced to the combined filtrate flow rate.

6.3.6 Treated Water Storage and Delivery

Following filtration and the application of disinfectant, fluoride and pH adjustment chemicals, filtrate is directed to two (2) interconnected underground storage reservoirs with a total volume of 3,850 m^3. The reservoirs include inter-basin baffles to promote the mixing of disinfectant with the water. Disinfected water is then held in the reservoir for a sufficient amount of time to achieve primary disinfection.

Four (4) vertical turbine high lift pumps located at the Atikokan WTP are available to transfer water from the treated water storage reservoirs to the Atikokan water distribution system. Two (2) of the high lift pumps (pumps no. 2 and 4) are rated at 66 L/s at a TDH of 59.8, with a third pump (pump no. 1) rated at 872 GPM at a TDH of 208 feet. The fourth high lift pump (pump no. 3) is a high capacity pump (148 L/s at a TDH of 53.4 m) that is available to supply higher volumes of treated water during emergency situations.

The lower capacity high lift pumps are installed in duty/standby configuration with automatic switchover capability. Control for these pumps is based on system pressure, with a pressure switch located on the common distribution header. The flow, disinfectant residual, turbidity, pH and fluoride residual are continuously monitored in treated water leaving the facility.

6.3.7 Process Waste Residuals Management

Residuals generated from the water treatment process are also managed at the Atikokan WTP. Backwash wastewater, filter-to-waste and clarifier-to-waste wastewater, and water used to operate continuous monitoring equipment is directed to the decant tank. Sludge residuals from the Actiflo hydrocyclone devices are directed to the sewage holding tank.

The sewage holding tank has a volume of 19.6 m^3 and the decant tank has a volume of 306.9 m^3. Each tank is equipped with two (2) submersible pumps to transfer process wastewater residuals to the municipal sewage collection system. As a contingency, the decant tank also includes a supernatant gravity overflow system discharging to a neighbouring creek. Special sampling is required during such an overflow event.

6.3.8 Instrumentation and Emergency Power

The Atikokan WTP includes an Actiflo treatment unit PLC and a main facility PLC, which are both integrated with a SCADA system for process monitoring and control. Critical process instruments include two (2) raw water flow measuring devices, one (1) combined filtrate flow measuring device, one (1) treated water flow measuring device, one (1) combined filtrate free chlorine residual analyzer, one (1) treated water free chlorine residual analyzer, one (1) treated water pH analyzer, one (1) treated water fluoride residual analyzer, four (4) online filtrate turbidimeters, and two (2) online clarifier effluent turbidimeters.

One (1) 80 kW diesel engine standby power generator set complete with a weather enclosure is available to supply emergency power to the LLPS. One (1) 350 kW diesel engine standby power generator set complete with fuel tank and weather enclosure is available to supply emergency power to the WTP.

6.4 Distribution System Components

The Atikokan water distribution system contains approximately 26 kilometres of water main that are between 150 mm and 450 mm in diameter. The majority of the distribution system consists of cast iron mains that were built between 1947 and 1960. A smaller proportion of the system consists of ductile iron and polyvinyl chlorine (PVC) water mains. Water mains are generally buried in the Town of Atikokan's public right of ways, approximately 2.4 metres below ground surface.

The distribution system also includes valves to stop or divert flow in order to control or isolate sections of water main. There are approximately 179 fire hydrants, which are used to provide fire protection and to assist in the maintenance of the system.

6.5 Process Flow Diagram

A process flow diagram for the system is provided on the following page.

Atikokan Water Treatment Plant – Process Flow Diagram

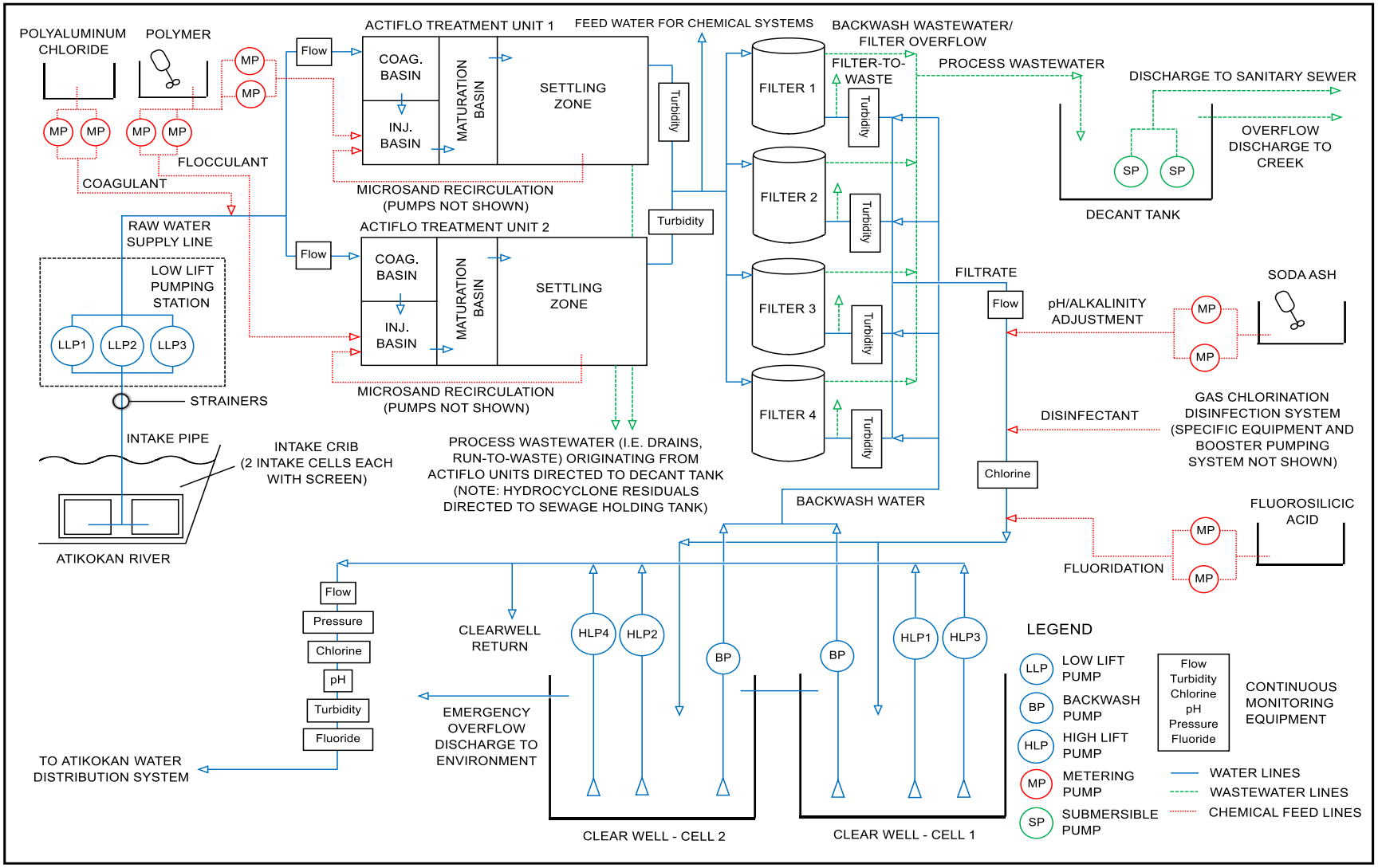

7 Risk Assessment

Refer to the *Risk Assessment Procedure* [NWI-QMS-7].

8 Risk Assessment Outcomes

8.1 Interpretation of the Risk Assessment Outcomes

The risk assessment outcomes were developed using the *Risk Assessment Procedure* [NWI-QMS-7]. This procedure contains all the information necessary to interpret the *Risk Assessment Outcomes* for the Atikokan Drinking Water System [ADWS-QMS-8]. The risk assessment outcomes include the following:

(1) Potential hazardous events and associated hazards;

(2) Assessed risks associated with the occurrence of hazardous events, including considering the likelihood, severity, and detectability of the event;

(3) Ranked hazardous events;

(4) Monitoring processes and control measures associated with each hazardous event;

(5) Critical control points and their respective critical control limits; and,

(6) Response procedures for hazardous events.

8.2 Monitoring Critical Control Limits

Various monitoring processes are in place to monitor critical control limits and to identify deviations from those limits. Critical control limits and other parameters associated with critical control limits are monitored by the following processes:

(1) Continuous monitoring and alarm systems (i.e. analyzers and trending associated with filtrate turbidity, free chlorine residual, flow, pressure, etc.). Alarm systems notify operators when critical control limits or other alarm set points have been breached;

(2) Routine regulatory sampling (i.e. weekly microbiological analyses, quarterly chemical analyses, annual chemical analyses, etc.);

(3) Routine water quality tests (i.e. daily tests for free chlorine and turbidity, routine process water quality tests);

(4) Operational checks, where operators collect and interpret data (i.e. pump hours, flows, analyzer readings, compliance data) and inspect facilities on a daily basis;

(5) Additional operational checks associated with planned maintenance, where certified operators conduct more detailed inspections of facilities on a monthly basis; and,

(6) Notification from external parties (i.e. notification that a chemical contamination event has occurred, notification of a large fire in the community, a water quality complaint that results in the identification of a cross-connection, etc.).

8.3 Critical Control Limit Deviations

Procedures outlining how to respond to, report and record deviations from critical control limits exist as a series of *Emergency Response Procedures*. Specifically, *Emergency Response Procedures* contain step-by-step response instructions, including instructions related to communication protocols and recordkeeping requirements.

All critical control limit deviations are recorded in the facility logbook but may also be recorded within Adverse Water Quality Incident documentation, call-out records, customer complaint records, and operational spreadsheets.

9 Organizational Structure, Roles, Responsibilities and Authorities

Refer to the *Organizational Policy* [NWI-QMS-9].

10 Competencies

Refer to the *Competencies Policy* [NWI-QMS-10].

11 Personnel Coverage

Refer to the *Personnel Coverage Policy* [NWI-QMS-11].

12 Communications

Refer to the *QMS Communication Procedure* [NWI-QMS-12].

13 Essential Supplies and Services

Refer to the *Essential Supplies and Services Procedure* [NWI-QMS-13].

14 Review and Provision of Infrastructure

Refer to the *Review and Provision of Infrastructure Procedure* [NWI-QMS-14].

15 Infrastructure Maintenance, Rehabilitation, & Renewal

15.1 Planned Maintenance, Rehabilitation, & Renewal

NWI, under contract with the owner, maintains a program of scheduled inspection and maintenance of infrastructure for which it is operationally responsible. Maintenance activities are developed according to manufacturer instructions, regulatory requirements, industry standards, and/or client service requirements. Records of planned maintenance activities are controlled in accordance with NWI's *Document and Records Control Procedure* [NWI-QMS-5]. The major components of the infrastructure maintenance, rehabilitation and renewal programs in place for the Atikokan Drinking Water System are described below.

(1) The *Planned Maintenance Activities* Standard Operating Procedure [ADWS-SOP-1] documents a comprehensive program that is carried out by Operators at the Atikokan Drinking Water System on a monthly or less frequent basis. This procedure dictates planned inspection and maintenance activities associated with infrastructure components including pumps, valves, chemical feed systems, treatment equipment, emergency response equipment, standby power systems, heating systems, lighting, and other components necessary to ensure a safe and reliable supply of drinking-water.

This procedure also facilitates infrastructure rehabilitation and renewal, as it requires the identification and reporting of deficiencies. Identified deficiencies may be addressed through operational budgets, particularly as it concerns the rehabilitation and renewal of smaller infrastructure components such as chemical feed systems and valves.

(2) The *Measurement and Recording Equipment Calibration and Maintenance Procedure* [ADWS-QMS-17] documents certain planned calibration and maintenance activities that are specific to instrumentation. The associated *Calibration and Maintenance Records* are used to indicate a variety of maintenance activities, such as instrument inspection, cleaning, and quality assurance. Generally, such activities are carried out by Operators at the Atikokan DWS on a monthly or quarterly basis.

(3) NWI monitors and coordinates additional maintenance activities that include infrastructure inspection, maintenance or servicing that occur on a less frequent basis. These activities may be performed by third parties and may include a) flow meter calibration verifications, b) hoist inspections, c) fire extinguisher inspections, d) backflow prevention device testing, e) thermal imaging inspections, f) emergency generator inspection and servicing, g) generator battery replacement, h) UPS and UPS component replacement, i) reservoir cleaning and inspections, and j) the inspection of intake structures and standpipes.

(4) The *Review and Provision of Infrastructure Procedure* [NWI-QMS-14] and annual budgeting procedures are the main methods through which infrastructure rehabilitation and renewal occurs. Specifically, the annual infrastructure review process evaluates overall infrastructure adequacy and provision. This process also requires the identification of deficiencies and the application of recommendations to address those deficiencies. The outcomes of the infrastructure review represent the main inputs into annual capital budgets prepared by NWI for consideration and approval by the Town of Atikokan. The integration of annual budgeting and infrastructure review processes represents a continuous and cohesive effort to identify deficiencies and plan for infrastructure rehabilitation and renewal.

15.2 Unplanned Maintenance

Unplanned maintenance tasks related to the treatment component of the Atikokan Drinking Water System result from equipment or infrastructure failures. Unplanned maintenance is authorized by the Operations Manager, Northwestern Regional Manager, or the Overall Responsible Operator. Documentation of these unplanned maintenance tasks are recorded in the facility logbooks. Measures to prepare for and expedite unplanned maintenance tasks in these scenarios include equipment interchangeability and redundancy, spare parts inventories, and the availability of relevant operations and maintenance manuals.

Unplanned maintenance tasks, infrastructure repair, and infrastructure renewal related to distribution system components of the Atikokan Drinking Water System are typically performed by the Town of Atikokan, in conjunction with representation from Northern Waterworks Inc. Measures to prepare for and expedite unplanned maintenance tasks include the cataloguing of the distribution system, maintaining a parts inventory, and having access to repair procedures.

15.3 Long Term Forecast

A long term forecast of major infrastructure maintenance, rehabilitation and renewal activities is included in the *Infrastructure Asset Management System* [ADWS-QMS-14-1] for the Atikokan Drinking Water System. In accordance with the *Review and Provision of Infrastructure Procedure* [NWI-QMS-14], the forecast is reviewed and updated once per calendar year coincident with the completion of the infrastructure asset condition assessments.

15.4 Program Monitoring

To ensure that the planned maintenance program remains effective, the *Planned Maintenance Activities* SOP and the *Measurement and Recording Equipment Calibration and Maintenance Procedure* are reviewed and updated annually. This review is facilitated by Compliance Coordinators and includes Operations Managers and Operators. The review accounts for changes to infrastructure and allows an opportunity to refine and continually improve the maintenance program, particularly as it involves incorporating new best practices.

15.5 Program Communication

NWI's infrastructure maintenance, rehabilitation and renewal programs for the Atikokan DWS are communicated to the Town of Atikokan on annual basis as a component of the communication of management review results. Significant planned and unplanned infrastructure maintenance, rehabilitation and renewal activities are also described in monthly operational reports submitted to the Town.

16 Sampling, Testing & Monitoring

Refer to the *Sampling, Testing, & Monitoring Procedure* for the Atikokan Drinking Water System [ADWS-QMS-16].

17 Measurement and Recording Equipment Calibration and Maintenance

Refer to the *Measurement and Recording Equipment Calibration and Maintenance Procedure* for the Atikokan Drinking Water System [ADWS-QMS-17].

18 Emergency Management

Refer to the *Emergency Management Procedure* [NWI-QMS-18].

19 Internal Audits

Refer to the *Internal Audit Procedure* [NWI-QMS-19].

20 Management Review

Refer to the *Management Review Procedure* [NWI-QMS-20].

21 Continual Improvement

Northern Waterworks Inc. is committed to continually improving the effectiveness of its Quality Management System. Continual improvement is facilitated by the management review and internal auditing processes, which include the identification of QMS deficiencies and the assignment of preventive and corrective actions.

Refer to the *Continual Improvement Procedure* [NWI-QMS-21].

22 Revision History

Date	Revision	Comments
1-Sep-2011	1	Initial publication of Operational Plan.
11-Mar-2013	2	New version following QMS re-structuring.
8-May-2013	3	Updates to section 6 (Drinking-Water System).
28-Oct-2013	4	Updates to sections 3 (Commitment and Endorsement) and 6 (Drinking-Water System).
13-Jan-2014	5	Updates to section 15 (Infrastructure Maintenance, Rehabilitation, and Renewal).
15-Apr-2015	6	Updates to sections 6 (Drinking-Water System), 8 (Risk Assessment Outcomes), and 13 (Essential Supplies and Services).
8-Apr-2019	7	Updates to sections 2 (QMS Policy), 3 (Commitment and Endorsement), 6 (Drinking-Water System), 8 (Risk Assessment Outcomes), 15 (Infrastructure Maintenance, Rehabilitation, and Renewal) and 21 (Continual Improvement).

Ontario

Ministry of the Environment and Climate Change

Schedule C – Director's Directions for Operational Plans (Subject System Description Form)

Municipal Residential Drinking Water System

Fields marked with an asterisk (*) are mandatory.

Owner of Municipal Residential Drinking Water System *
The Corporation of the Town of Atikokan

Name of Municipal Residential Drinking Water System *
Atikokan Drinking Water System

Subject Systems

☑ Check here if the Municipal Residential Drinking Water System is operated by one operating authority. Enter the name of the operating authority in the below table.

	Name of Operational Subsystems(if Applicable)	Name of Operating Authority *	DWS Number(s) *
1		Northern Waterworks Inc.	220000950

Provide the information outlined in the 'Contact Information' section for **each** Operational Subsystem.

Contact Information 1

Last Name *	First Name *	Middle Initial
Kyle	Nicholas	

Title *	Phone Number *
Compliance Coordinator - NWI	807 728-1824

Email Address *
nicholas.kyle@nwi.ca

Contact Information 2

Last Name *	First Name *	Middle Initial
LeBlanc	Jason	

Title *	Phone Number *
Chief Administrative Officer - NWI	807 728-3323

Email Address *
jason.leblanc@nwi.ca